| DWG. NO. | SH. | REV. |
|---|---|---|
| 92355 | 1 | A |

| DWG REV | A | | | | | | | | | | | | | |
|---|---|---|---|---|---|---|---|---|---|---|---|---|---|---|
| BD BFV | | | | | | | | | | | | | | |
| A/W REV | | | | | | | | | | | | | | |

REVISIONS

| ZONE | REV | DESCRIPTION: | DATE: | APPROVED: |
|---|---|---|---|---|
| | | INITIAL RELEASE | 10/07/2010 | DG |

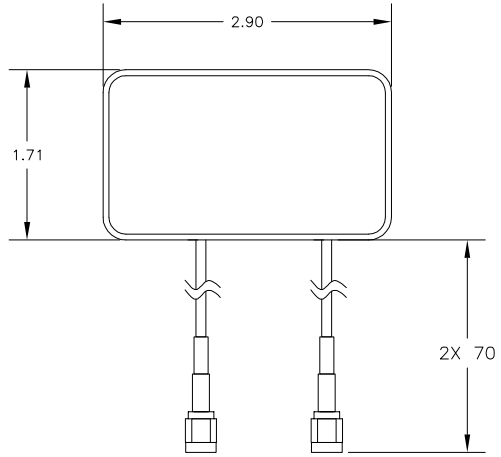


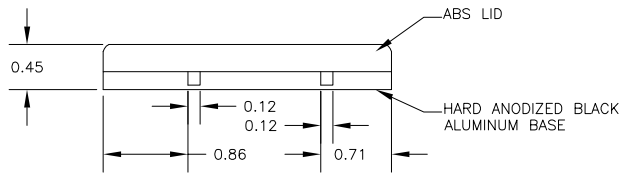


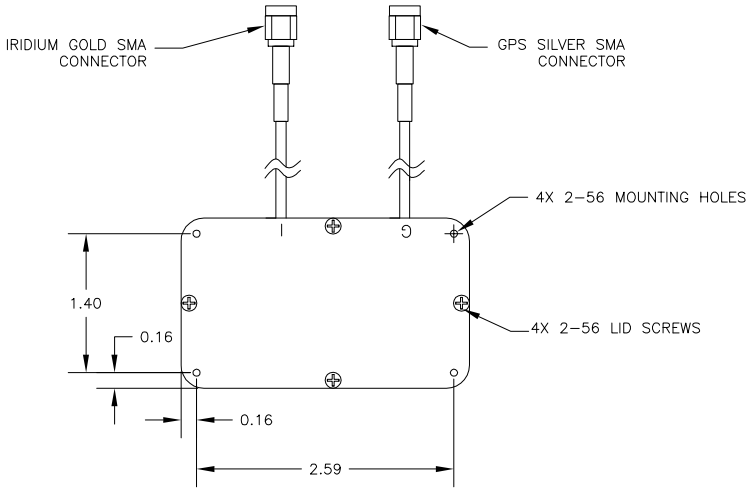


| | | | |
|---|---|---|---|
| UNLESS OTHERWISE SPECIFIED DIMENSIONS ARE IN INCHES TOLERANCES ARE: FRACTIONS ± DECIMALS .xx ± .01" .xxx ± .005" ANGLES ± | CONTRACT NO. | | NAL RESEARCH CORP. |
| | APPROVALS | DATE | DRAWING NAME |
| MATERIAL | DESIGNER E. RODERICK | 10/07/2010 | SAF7352-IG |
| | CHECKER FILE | | |
| FINISH | PROJ. ENG. EAC | | C / CAGE CODE / DWG NO. 92355 / REV A |
| | APPROVED D. GAIBROIS | 10/07/2010 | SCALE / SHEET 1 of 1 |

CAD DRAWING FILE NAME: SAF7352-IG

CAD GENERATED DRAWING. MANUAL CHANGES NOT ALLOWED

DWG. NO. 92355 SH. 1 REV. A